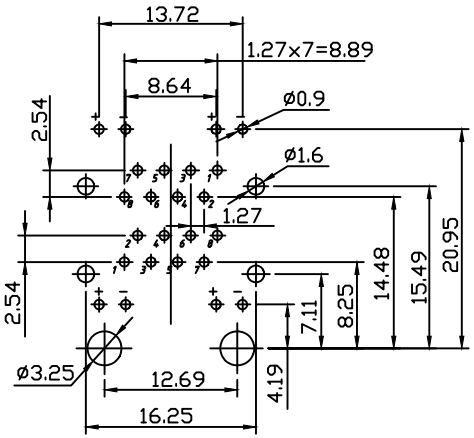

PCB Layout

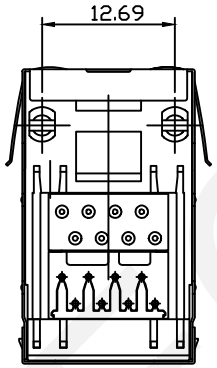

Material:
Housing:PBT+Glass Filled Polyester
Flammability Rating:UL94V-0
Contacts:Phosphor Bronze ø0.46mm
Plating:Gold Plating
Shield:Brass, Tin Plating

Electrical:
Voltage Rating:125VAC
Current Rating:1.5A
Contact Resistance:30mΩ Max.
Insulation Resistance: 500MΩ Min.
Dielectric Strength:1000VAC Rms 50Hz,1 Min.
Durability:600 cycles Min.
Operation Temperature:-40℃~+70℃

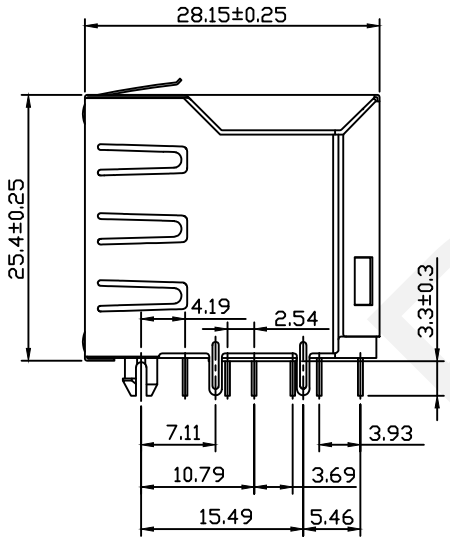

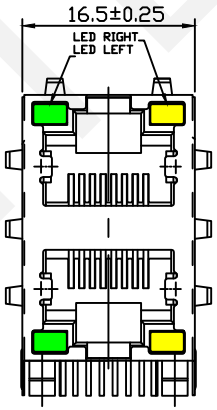

Order Information
RHTLY13C-8P8C-2x1-X-G/Y-XX

Contacts:8P8C
Shield Code:
1-with Shield
2-with EMI Shield
LED Code:LEFT/RIGHT
G/Y-Green/Yellow
Y/G-Yellow/Green
Plating Code:
01-Fu" Gold Plating,02-3u" Gold Plating
03-6u" Gold Plating,04-15u" Gold Plating
05-30u" Gold Plating

RHTECP

RHTECP NINGBO RHT ELECTRONIC CO.,LTD	UNITS:mm	SHEET SIZE: A4	SCALE:---	DRWN BY PAN	Modular jacks RJ45-8P8C 2x1 Jack Shield with LED
	0~3	3~18	18~50	50~120	CHK'D BY FENG
	±0.12	±0.15	±0.3	±0.5	APPR BY ZHAN
	THIRD ANGLE PROJECTION				RHTLY13C-8P8C-2x1-X-X/X-XX